ScenicLiving

By BMARCHITECTURAL

INSTALLATION GUIDANCE

ScenicLiving

Panel Composite Fencing



Important Notes

The diagrams and instructions outlined in this guide are for illustrative purposes only.

Installation is shown for a 6ft fence using new aluminium posts. The instructions are applicable to bays of any height – with only the cut post length and number of fence boards differing for a 4ft and 5ft fence. ScenicLiving panel composite fence boards and top/bottom rails can also be used with existing concrete posts. In this case, U-channels, channel caps and relevant fixing screws are supplied.

To function correctly, this fencing system requires top/bottom rails to be installed correctly to ensure sufficient rigidity, support and air flow.

Our posts are not designed as primary load-bearing members and should not be used as structural columns, beams etc.

Safety

Take safety precautions before installing the fencing. Check that any equipment is working properly, and wear protective safety gear such as gloves, goggles, and impact resistant shoes.

Environment

Check with local building regulations before installing any type of fencing (e.g. height/location of fence.).

Installation requires a clean, smooth and level surface. If installation is not carried out within a timely manner following receipt of the composite fencing components, the system should be stored on a flat surface at all times. Never place on an uneven surface.

Planning

Plan the layout for your fencing before you start installation to ensure you get the best look for your project.

Tel: 0114 254 3226 | Email: sales@bmarchitectural.com
www.bmarchitectural.com

System Design

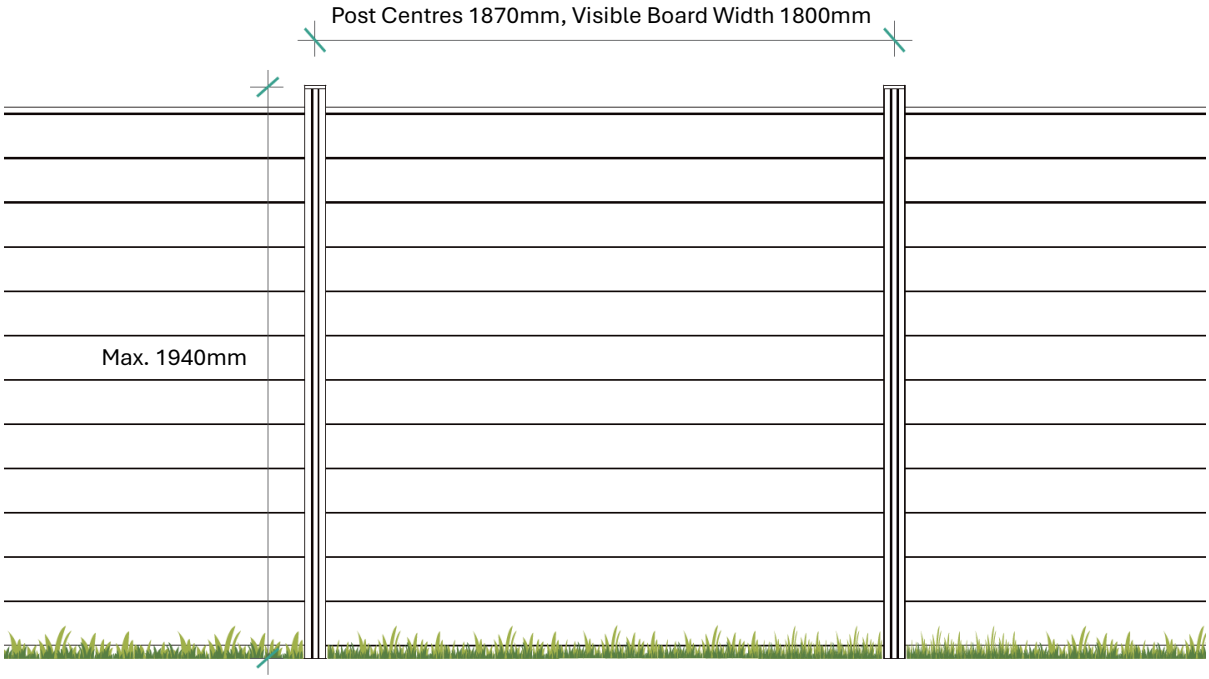

Our Posts are designed to act as either end posts, middle posts, corner posts or T-intersection posts. Post Inserts are installed as required (and as shown below).

End
Post Inserts added
to front and outside faces

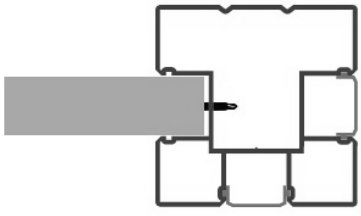

Middle
Post Insert added
to front face

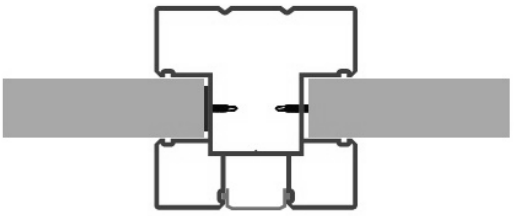

Corner
Post Insert added to
outside face

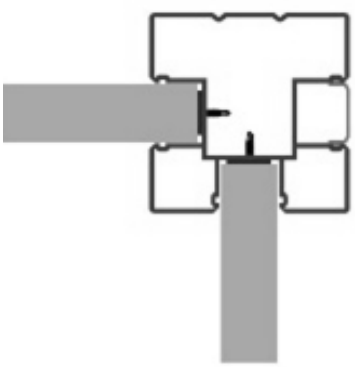

T-Intersection
Post Inserts not required

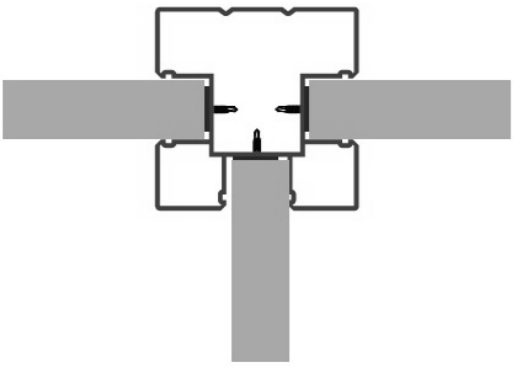

Tel: 0114 254 3226 | Email: sales@bmarchitectural.com
www.bmarchitectural.com

Exploded View of System

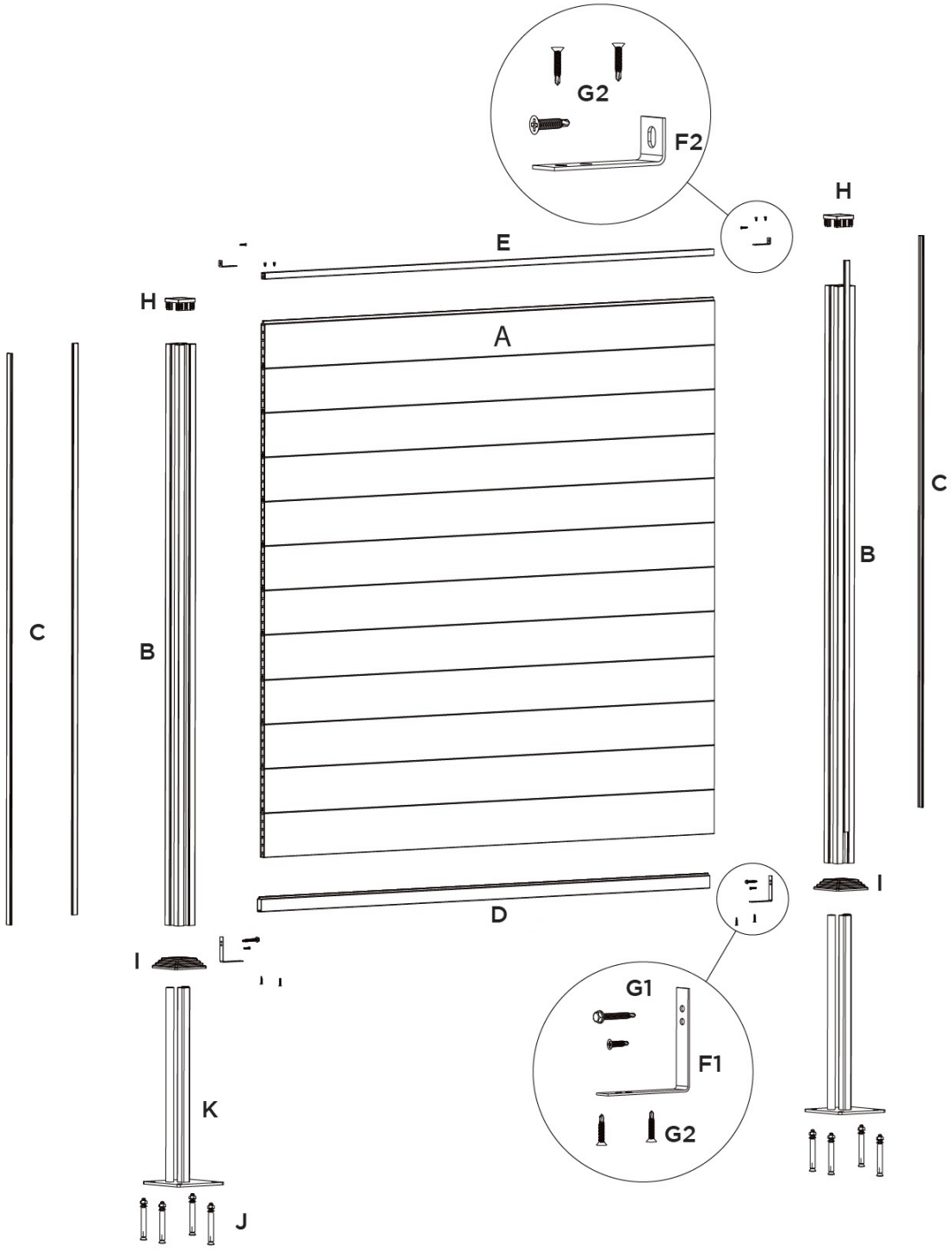

Tel: 0114 254 3226 | Email: sales@bmarchitectural.com
www.bmarchitectural.com

System Components

A	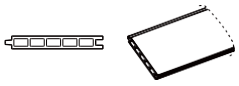	Fence Board (150 x 20 x 1830mm)
B	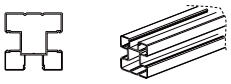	Post* (68 x 68 x 2440mm)
C	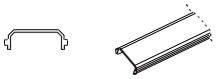	Post Insert (to cover Post void)
D	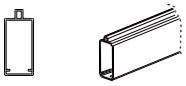	Bottom/Start Rail
E	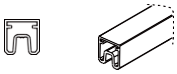	Top/End Rail
F1	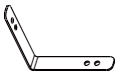	Clip
F2		Clip
G1		Screw (M4 x 32mm)
G2		Screw (M4 x 8mm)
H	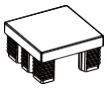	Post Cap
I		Post Skirt
K	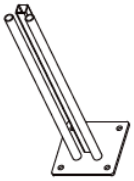	Steel Support Post (Optional, if surface-fixing to concrete)
J		Bolts for Steel Support Post (Optional, if surface-fixing to concrete)

*Note. Posts are 2.44m as standard, suitable for a 6ft fence. For shorter elevations, posts should be cut down on site to suit requirements (while still ensuring a minimum anchorage of 500mm in the ground). This provides maximum design flexibility and enables stepped installations, where runs contain bays of differing height.

Tel: 0114 254 3226 | Email: sales@bmarchitectural.com
www.bmarchitectural.com

Post Installation

Step 1

Measure and mark the post centres at a distance of 1870mm.

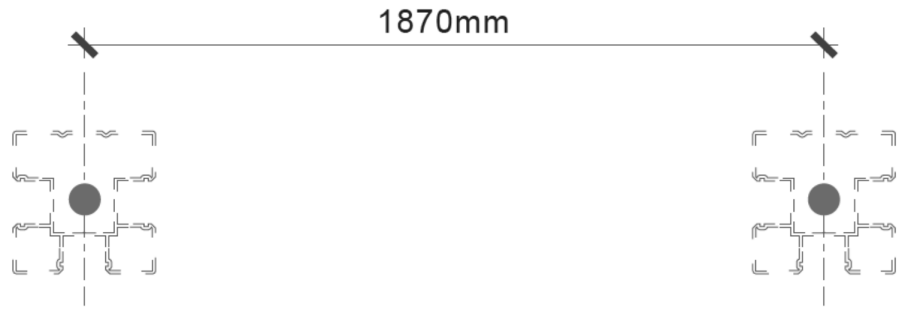

Step 2

Dig holes to 650mm depth and a diameter of 250mm. In colder climates, dig the holes below the frost line.

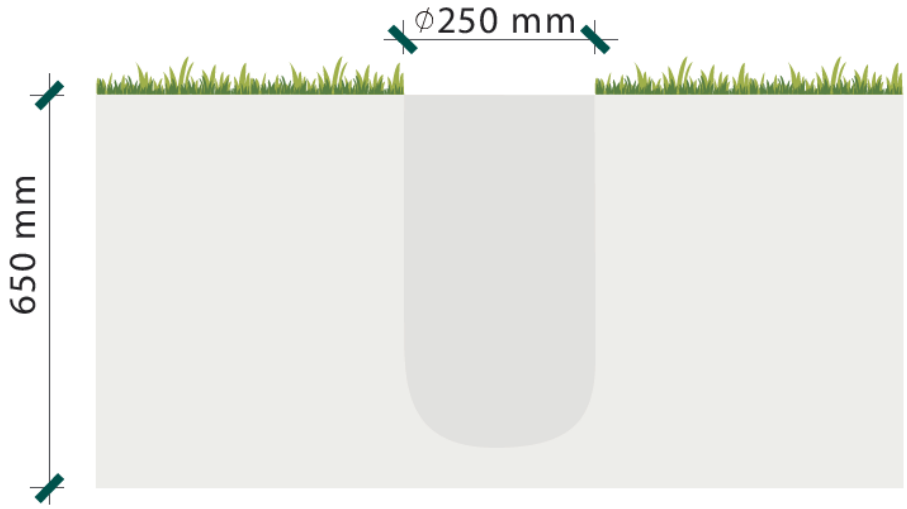

Step 3

Layer 150mm of gravel at the bottom of the hole for drainage.

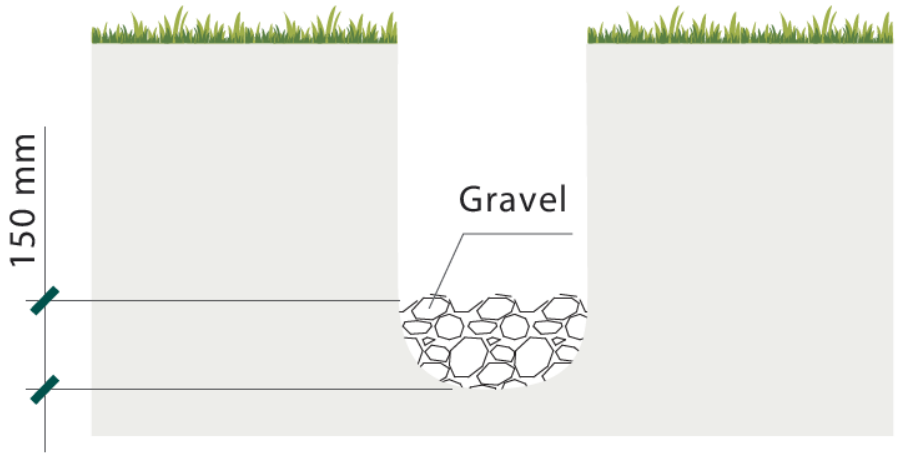

Tel: 0114 254 3226 | Email: sales@bmarchitectural.com
www.bmarchitectural.com

Step 4

Position the Post (B) in the centre of the hole on top of the gravel to achieve a minimum 500mm anchorage. Ensure the post is plumb using a spirit level.

Step 5

Pour the concrete into the hole, making sure the concrete is poured evenly around the post, to 50mm below ground level.

Step 6

Once the concrete is set, fill the top of the hole with soil. If a Post Skirt (I) is being used, install ahead of the fence boards by sliding down Post length.

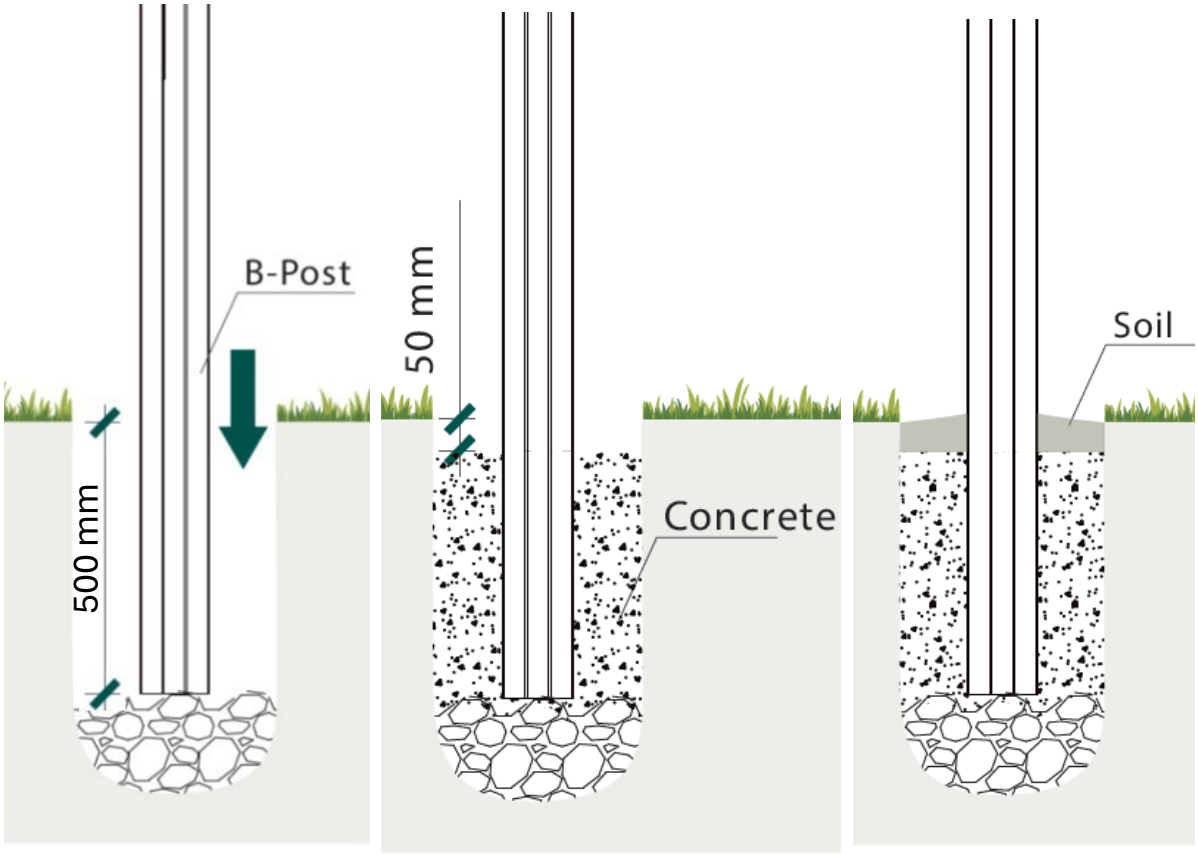

Tel: 0114 254 3226 | Email: sales@bmarchitectural.com
www.bmarchitectural.com

Alternative Post Installation – Surface Fixing into Concrete Base

Step 1

Measure and position the Support Post (K) at 1870mm centres, and mark the hole positions on the ground.

Step 2

Drill the marked holes to bolt manufacturer specifications and insert the bolts (J).

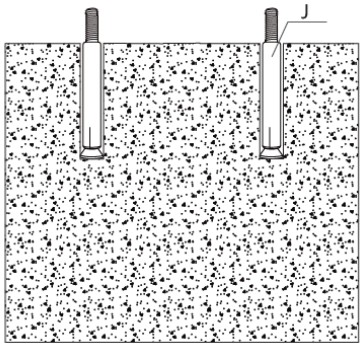

Step 3

Align the installation holes of the Support Post (K) with the corresponding bolts (J), insert post, and secure with nuts. Tighten to bolt manufacturer's specifications.

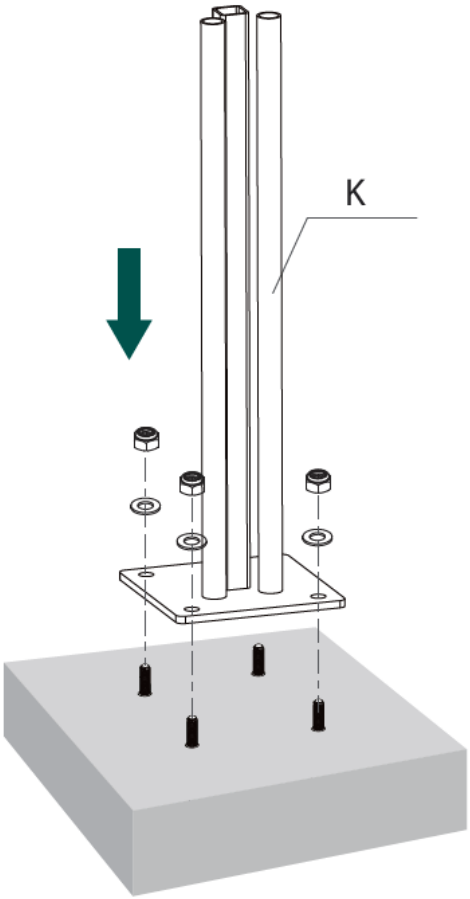

Tel: 0114 254 3226 | Email: sales@bmarchitectural.com
www.bmarchitectural.com

Step 4

Align the Post (B) with the Support Post (K) as shown in plan view below and insert. If a Post Skirt (I) is being used, install ahead of the fence boards by sliding down Post (B) length.

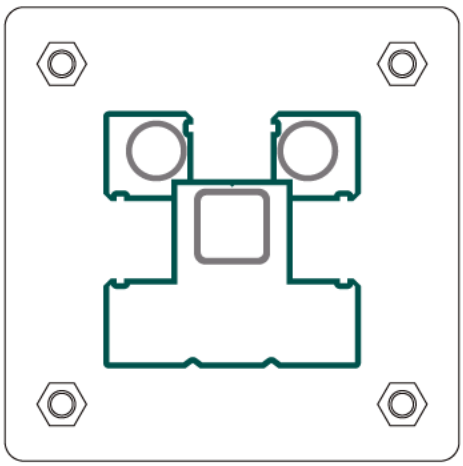

Plan View

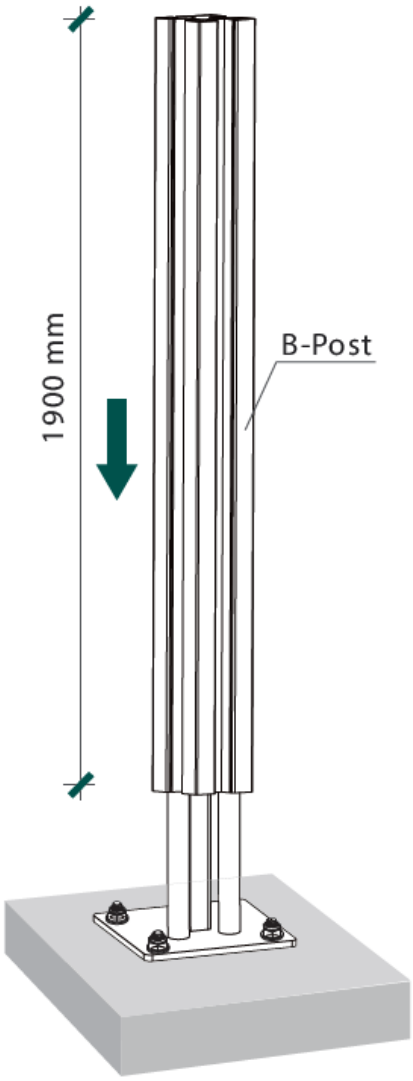

Tel: 0114 254 3226 | Email: sales@bmarchitectural.com
www.bmarchitectural.com

Fence Board Installation

Step 1

Insert the Clip (F1) into the Bottom Rail (D), fasten with screw (G1). Repeat at each end.

Pay attention to the direction of the Clip.

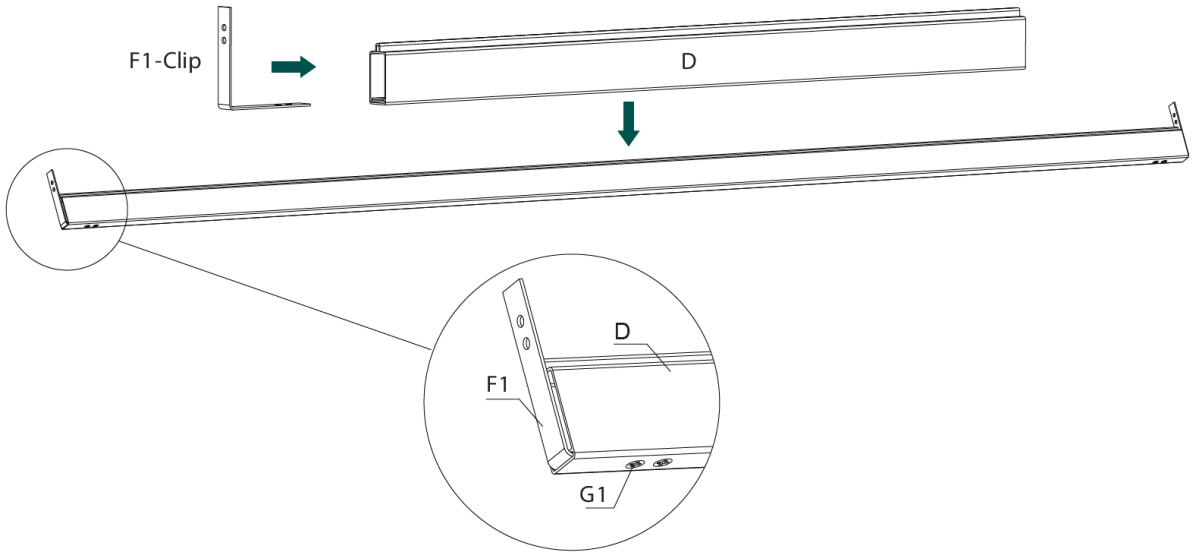

Step 2

Install the Bottom Rail (D) onto the upright (B) using screw (G1). The distance from the ground should not exceed 50mm.

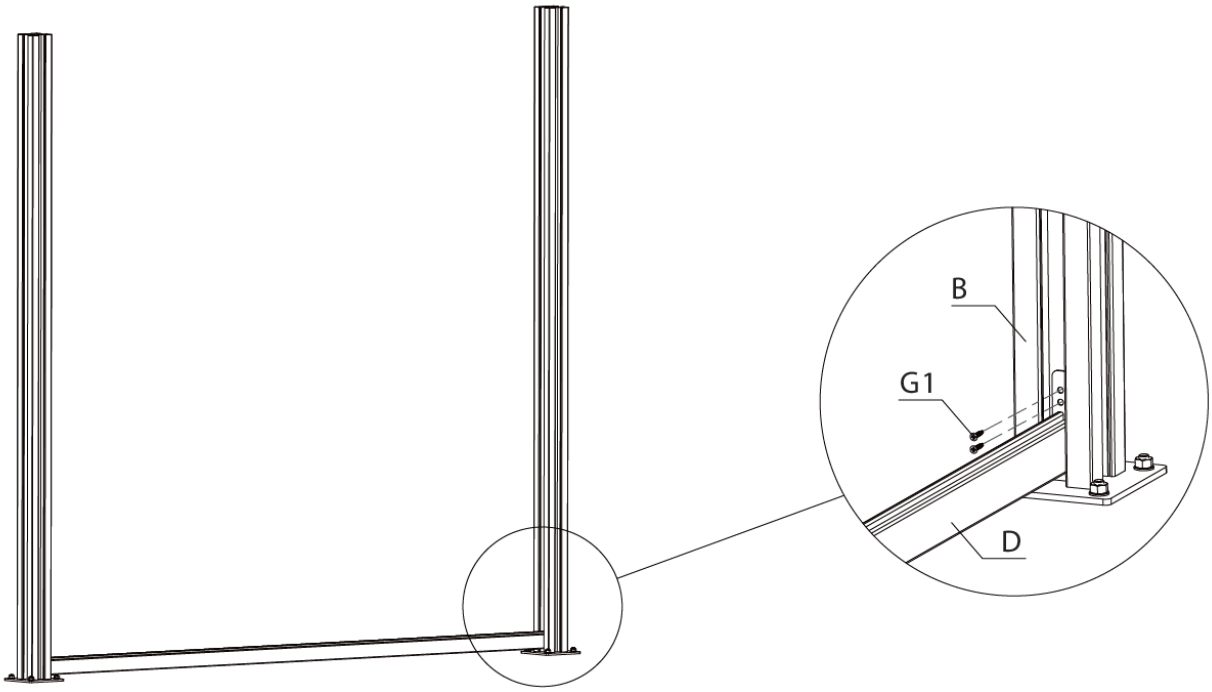

Tel: 0114 254 3226 | Email: sales@bmarchitectural.com
www.bmarchitectural.com

Step 3

Position the first Fence Board (A) over the Bottom Rail (D), interlocking the tongue-and-groove design.

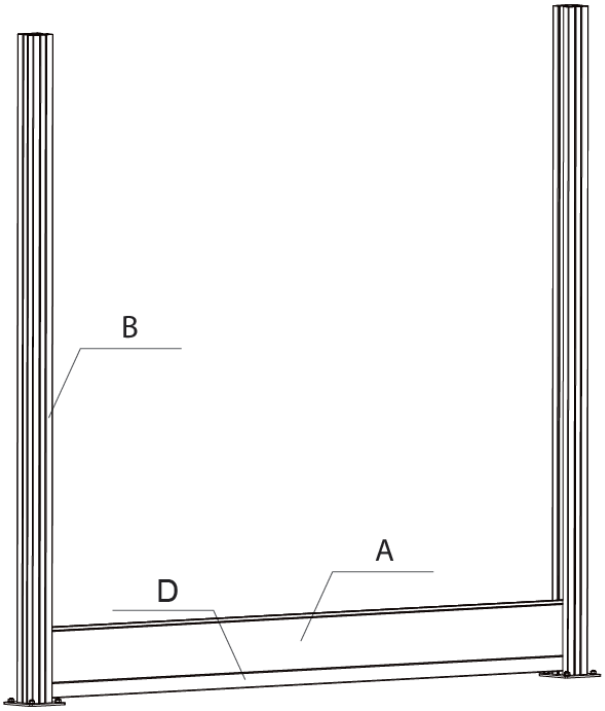

Step 4

Complete the installation for the rest of the Fence Boards (A).

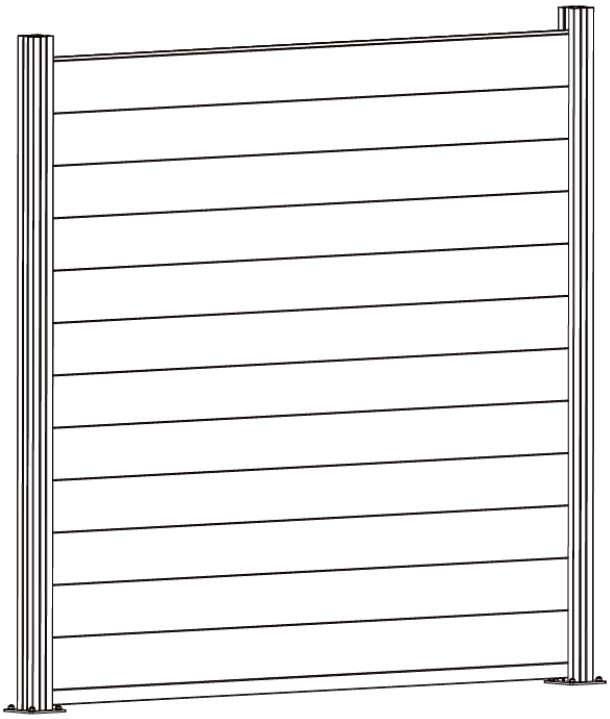

Tel: 0114 254 3226 | Email: sales@bmarchitectural.com
www.bmarchitectural.com

Step 5

Insert the Clip (F2) into the End Rail (E), fasten with screw (G2). Repeat at each end.

Pay attention to the direction of the Clip.

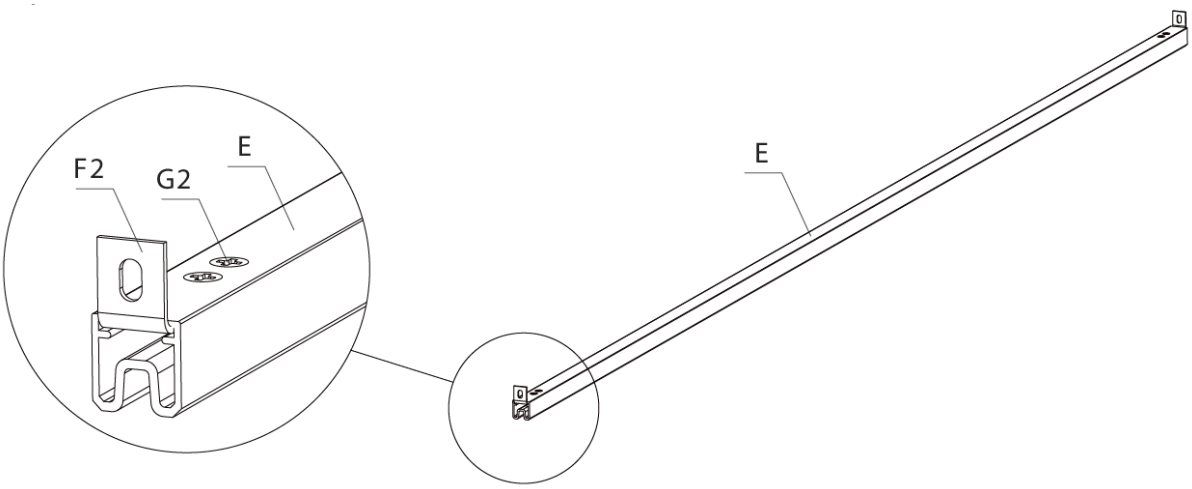

Step 6

Fix the End Rail (E) to the Post (B) using screw (G1).

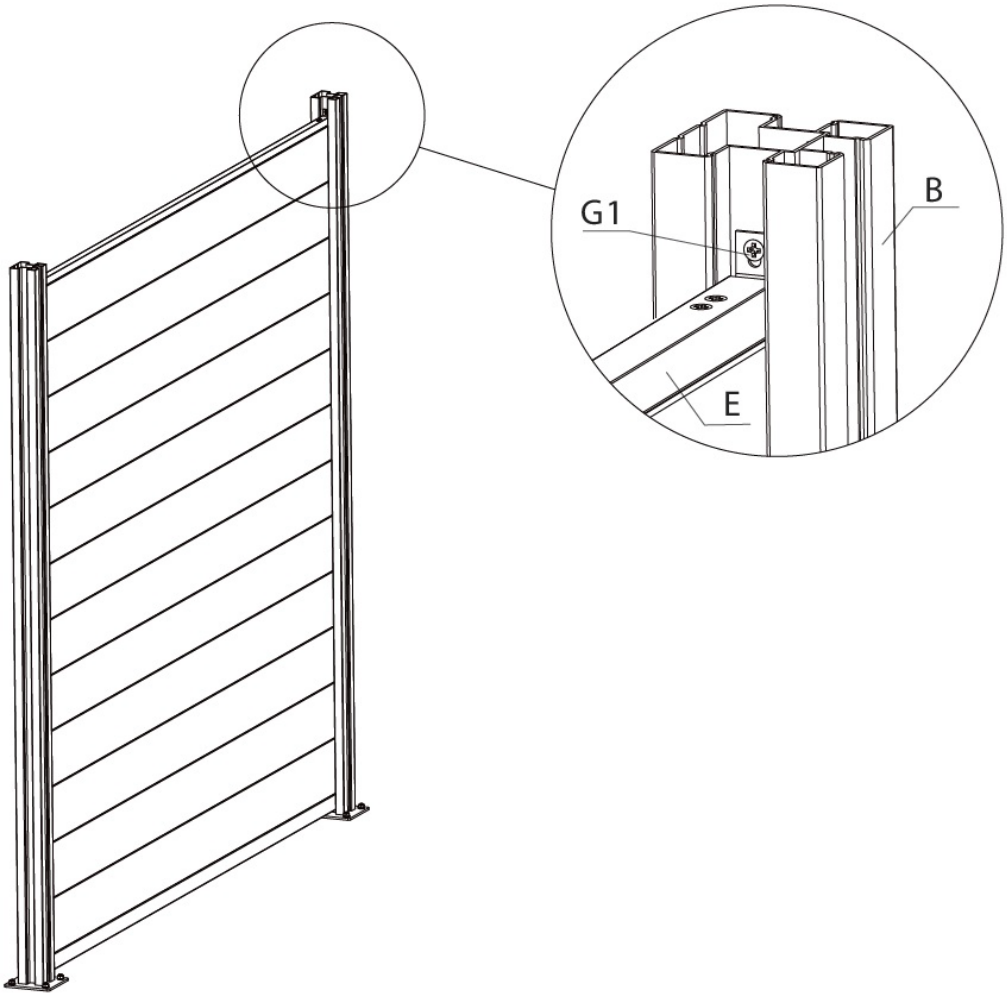

Tel: 0114 254 3226 | Email: sales@bmarchitectural.com
www.bmarchitectural.com

Step 7

Insert the Post Insert (C) into the Post (B) as required.

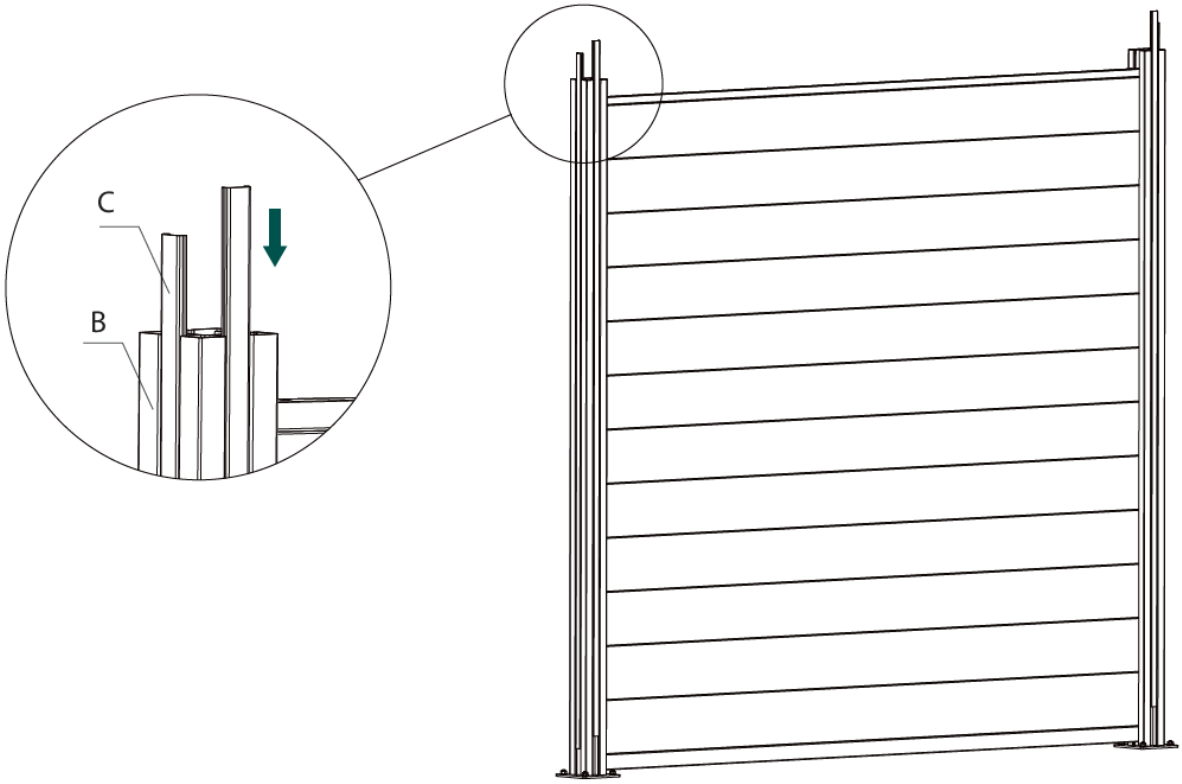

One Post Insert (C) or 'cover' is provided with each fencing kit. Three inserts/covers are supplied with an End Post Kit. The diagram below provides an explanation of how these are used in a typical installation.

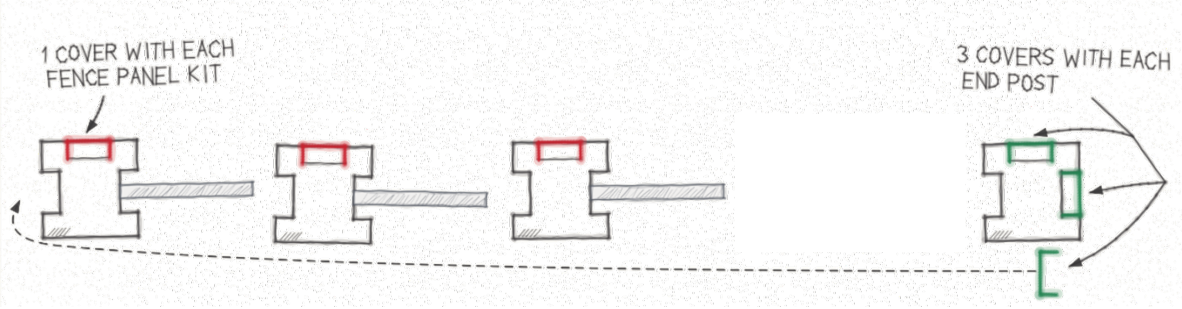

Tel: 0114 254 3226 | Email: sales@bmarchitectural.com
www.bmarchitectural.com

Step 8

Add the Post Caps (H) to complete the installation.

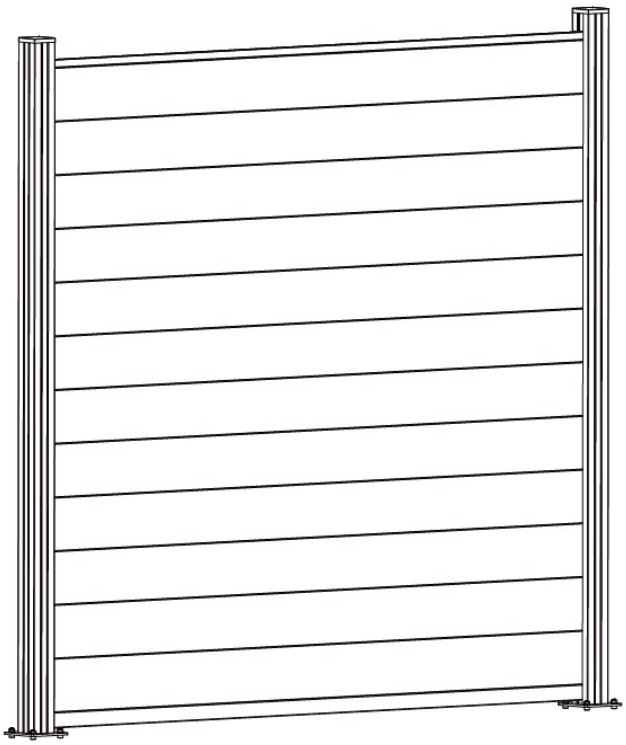

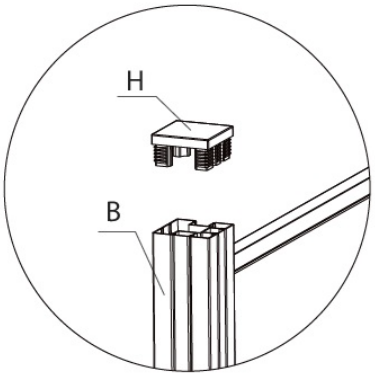

Tel: 0114 254 3226 | Email: sales@bmarchitectural.com
www.bmarchitectural.com